THE UNITED REPUBLIC OF TANZANIA
NATIONAL EXAMINATIONS COUNCIL OF TANZANIA
ADVANCED CERTIFICATE OF SECONDARY EDUCATION EXAMINATION

131/3A

PHYSICS 3A
ACTUAL PRACTICAL A
(For Both School and Private Candidates)

Time: 3:20 Hours **Wednesday, 15th May 2019 a.m.**

Instructions

1. This paper consists of **three (3)** questions.
2. Answer **all** the questions.
3. Calculations should be clearly shown.
4. Question **Number 1** carries 20 marks and the other **two (2)**, 15 marks each.
5. All answers must be written in the answer booklet(s) provided.
6. Mathematical tables and non-programmable calculators may be used.
7. Cellular phones and any unauthorized materials are **not** allowed in the examination room.
8. Write your **Examination Number** on every page of your answer booklet(s).
9. Use the following:

   Specific heat capacity of water, $C_w = 4.2 J/gK$

   Specific heat capacity of copper, $C_C = 0.42 J/gK$

1 902131 321018

f6may19

Find more free educational resources at:
http://maktaba.tetea.org

Scanned by CamScanner

1. In this experiment you are required to determine the relative density of a solid provided.

Proceed as follows:

(a) (i) Measure the mass of the metre rule and record its value.

(ii) Set up the apparatus as shown in Figure 1. Balance the metre rule on the knife edge, when the solid, M_o is suspended in air at a distance, d (cm) from zero end of the rule.

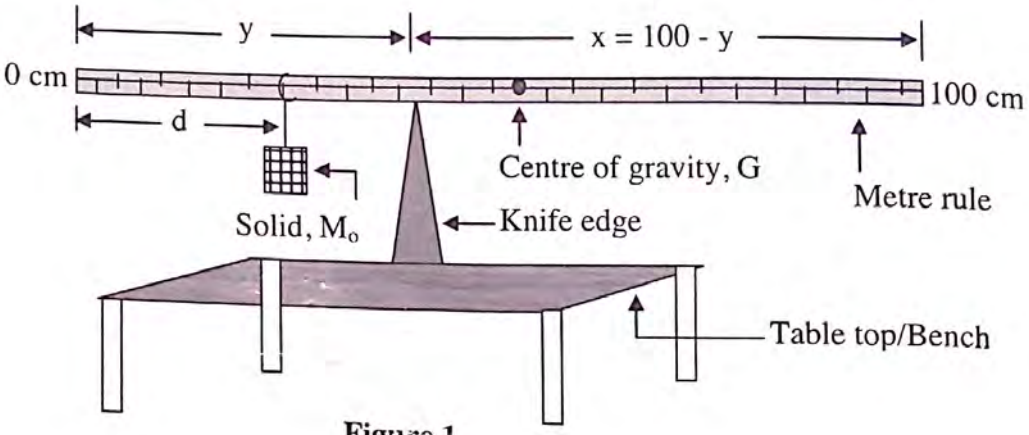

Figure 1

(b) Measure the distance, **y** (cm) and **x** (cm) of the knife edge from each end of the rule; **y** being the distance from the zero end. Repeat four other values of, d less than 50cm. Tabulate your results.

(c) Fill the beaker with water then repeat the procedure in parts (a) and (b) when the solid is completely immersed in water. Tabulate your results.

(d) Plot the graphs of x - y against y - d for each set of observations on the same sheet of the graph paper.

(e) Find the gradient of each graph.

(f) Calculate the:

(i) Mass of the solid.

(ii) Relative density of the solid.

(g) State two sources of errors and its precautions taken in performing this experiment.

2. The aim of this experiment is to determine the specific heat capacity of a given mass of brass.

Proceed as follows:

Find more free educational resources at:
http://maktaba.tetea.org

Scanned by CamScanner

(a) Weigh the empty calorimeter and then place it in an insulated jacket. Using measuring cylinder, measure and fill 100 ml of water into the calorimeter.

(b) Pour another 100 ml of water in a 250 ml beaker. Add 100 g of brass tied with the thread in the beaker then heat the beaker containing water and brass to $90^{o}C$.

(c) Quickly transfer the brass by means of thread provided into the copper calorimeter containing 100 ml of cold water. Read and record the maximum temperature reached by the mixture and the room temperature.

(d) Weight the calorimeter and its contents, and then determine the mass of water.

(e) Given the relation: $M_c C_c \Delta\theta + M_w C_w \Delta\theta = M_b C_b \Delta\theta$, where,

M_c, M_w and M_b are masses of empty calorimeter, water and brass respectively, C_c, C_w and C_b are specific heat capacities of copper, water and brass respectively and $\Delta\theta$ is the change in temperature; Calculate the specific heat capacity, C_b of brass provided.

3. In this experiment you are required to determine the internal resistance of a dry cell. Proceed as follows:

(a) Connect in series the given dry cell with e.m.f. E, a resistor R, an ammeter A and a switch K.

(b) Draw the circuit you connected in 3 (a).

(c) Measure and record the value of current I when the resistance R is 1Ω.

(d) Repeat the procedures in 3 (b) for values of $R = 2\Omega, 3\Omega, 4\Omega$ and 5Ω.

(e) Tabulate your results including the value of $\frac{1}{I}$.

(f) Plot a graph of $\frac{1}{I}$ against R.

(g) Find the slope of the graph.

(h) Using the graph and the value of slope, determine the internal resistance of a dry cell.

Find more free educational resources at:
http://maktaba.tetea.org

Scanned by CamScanner